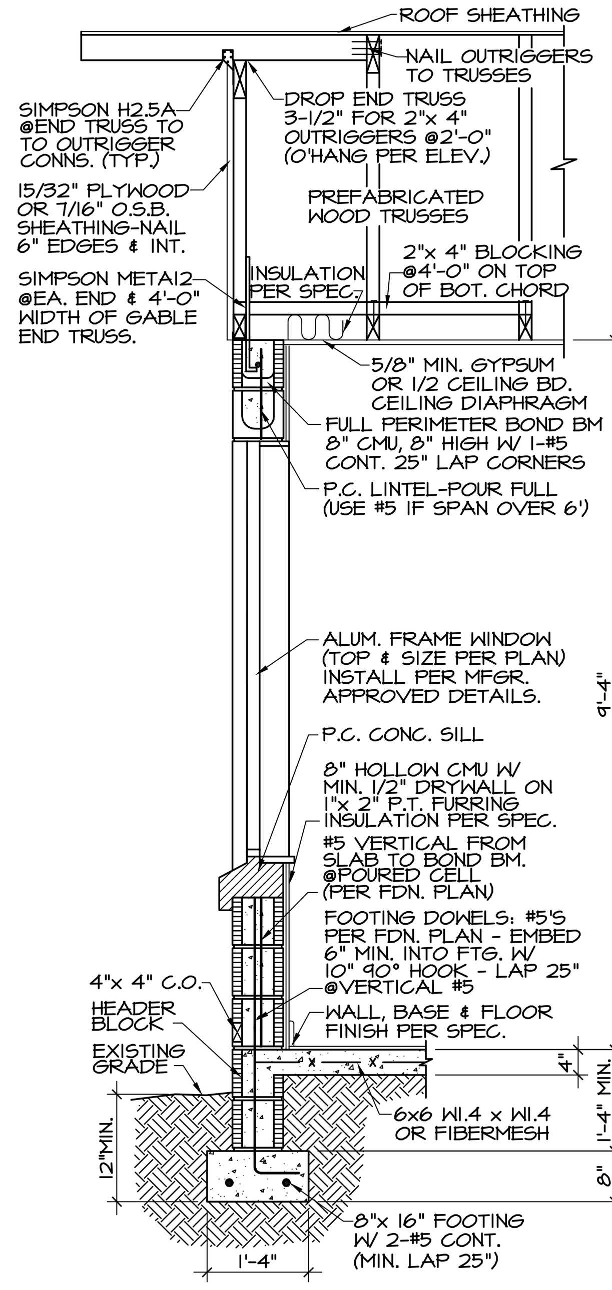

SECTION 9-4WG / 2
1/2" = 1'-0"

9'-4" Masonry Wall/Gable Truss 8"x 16" Stemwall Footing
REVISED 4/2/2016

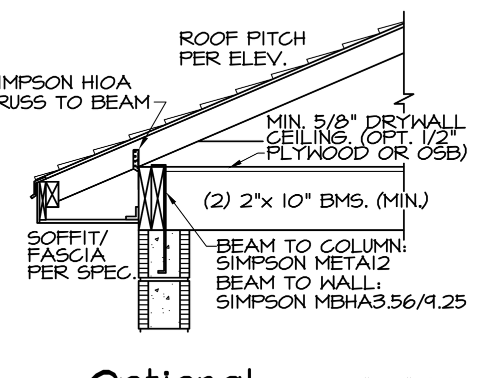

Optional Wood Beam
REQUIRES ENGINEER'S APPROVAL IF CLEAR SPAN OVER 12'-0"

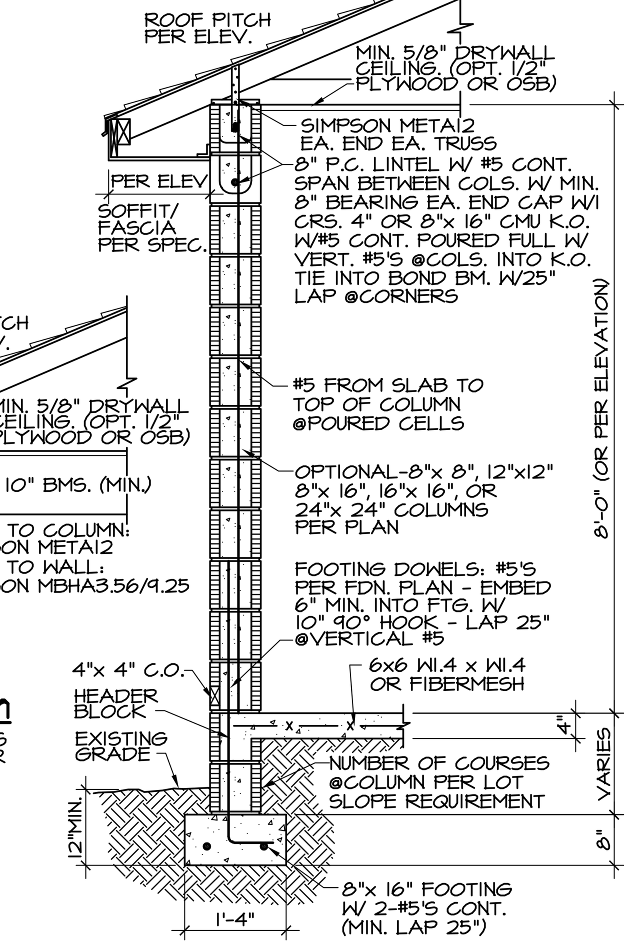

SECTION C1 / 2
1/2" = 1'-0"

Masonry Column And Beam 8"x16" Stemwall Footing
REVISED 6/30/2016

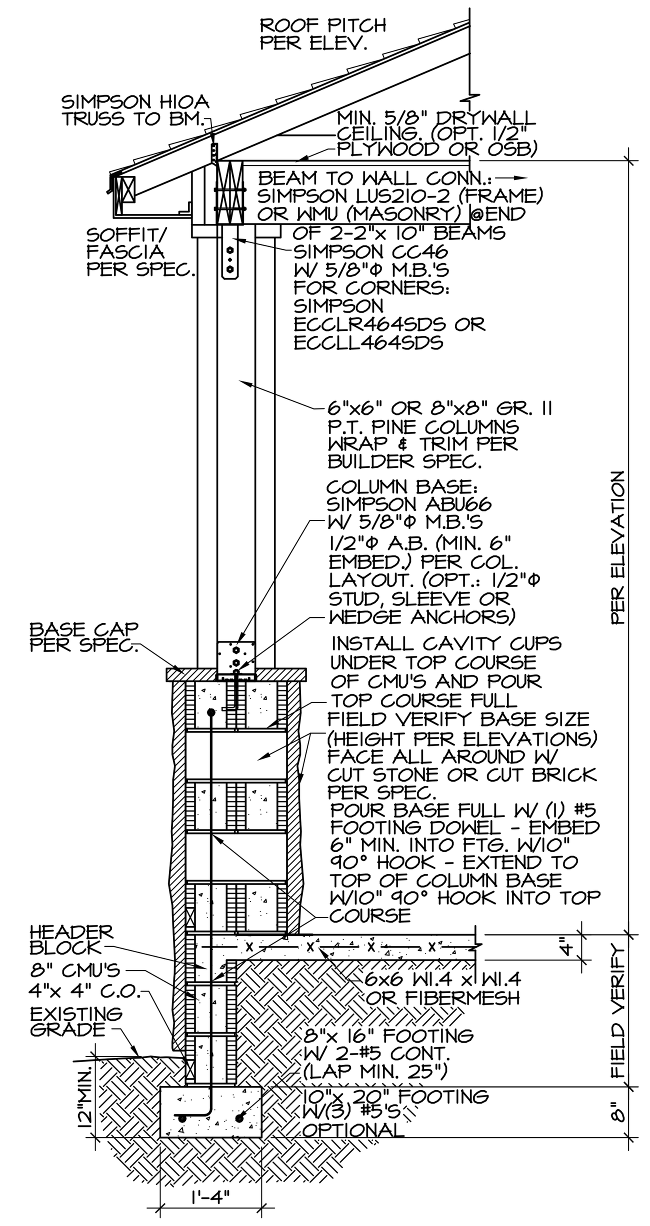

SECTION CF101 / 2
1/2" = 1'-0"

Wood Column W/16"x 16" CMU Base (2) 2"x 10" Beam Hip Truss Square Trim Stemwall Footing
REVISED 1/11/2018

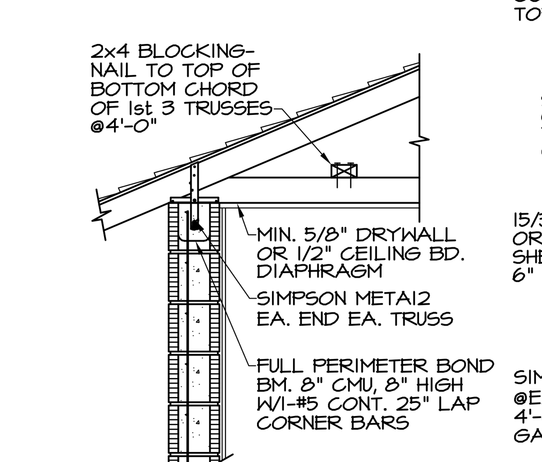

SECTION B / 2
1/2" = 1'-0"

Gypsum Ceiling Diaphragm To Sidewall Connection
REVISED 9/14/2016

NOTE:
SIMPSON H2.5A = 365# UPLIFT
F1 = LATERAL 150# TRANSVERSE
F2 = 150# PARALLEL W/WIND LOAD
(THIS REACTION TRANSFERS HORIZONTAL SHEAR @GABLE END INTO ROOF DIAPHRAGM CONSISTING OF PLYWOOD NAILED TO TOP CHORDS OF ROOF TRUSSES.

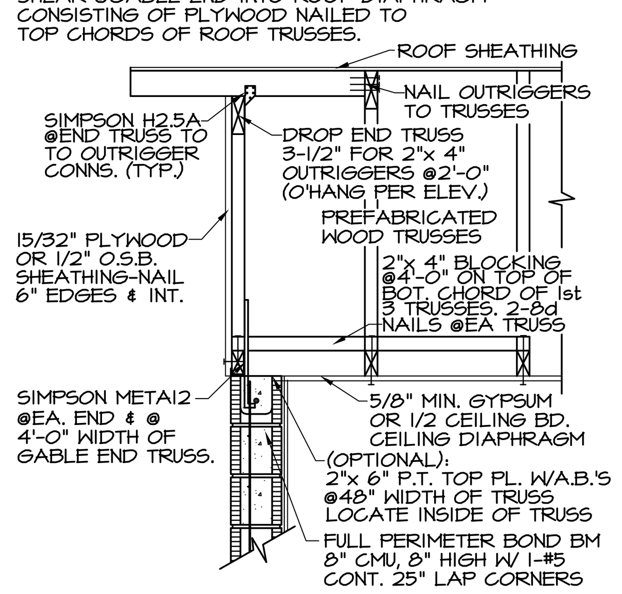

SECTION C / 2
1/2" = 1'-0"

Gypsum Ceiling Diaphragm Direct Truss to Masonry Endwall Connection
REVISED 9/14/2016

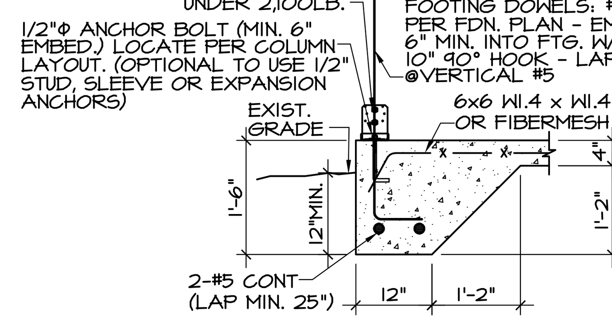

SECTION F10 / 2
1/2" = 1'-0"

Monolithic Footing
REVISED 7/20/2015

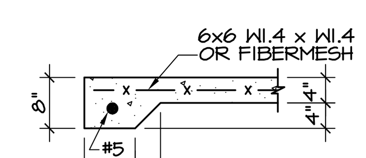

SECTION F1 / 2
1/2" = 1'-0"

Bell Footing
REVISED 7/20/2015

(OPTIONAL FOOTINGS)

SECTION A / 2 — SECTION NUMBER; PAGE NUMBER SECTION IS TAKEN FROM OR DETAIL IS DRAWN ON
1/4" = 1'-0"

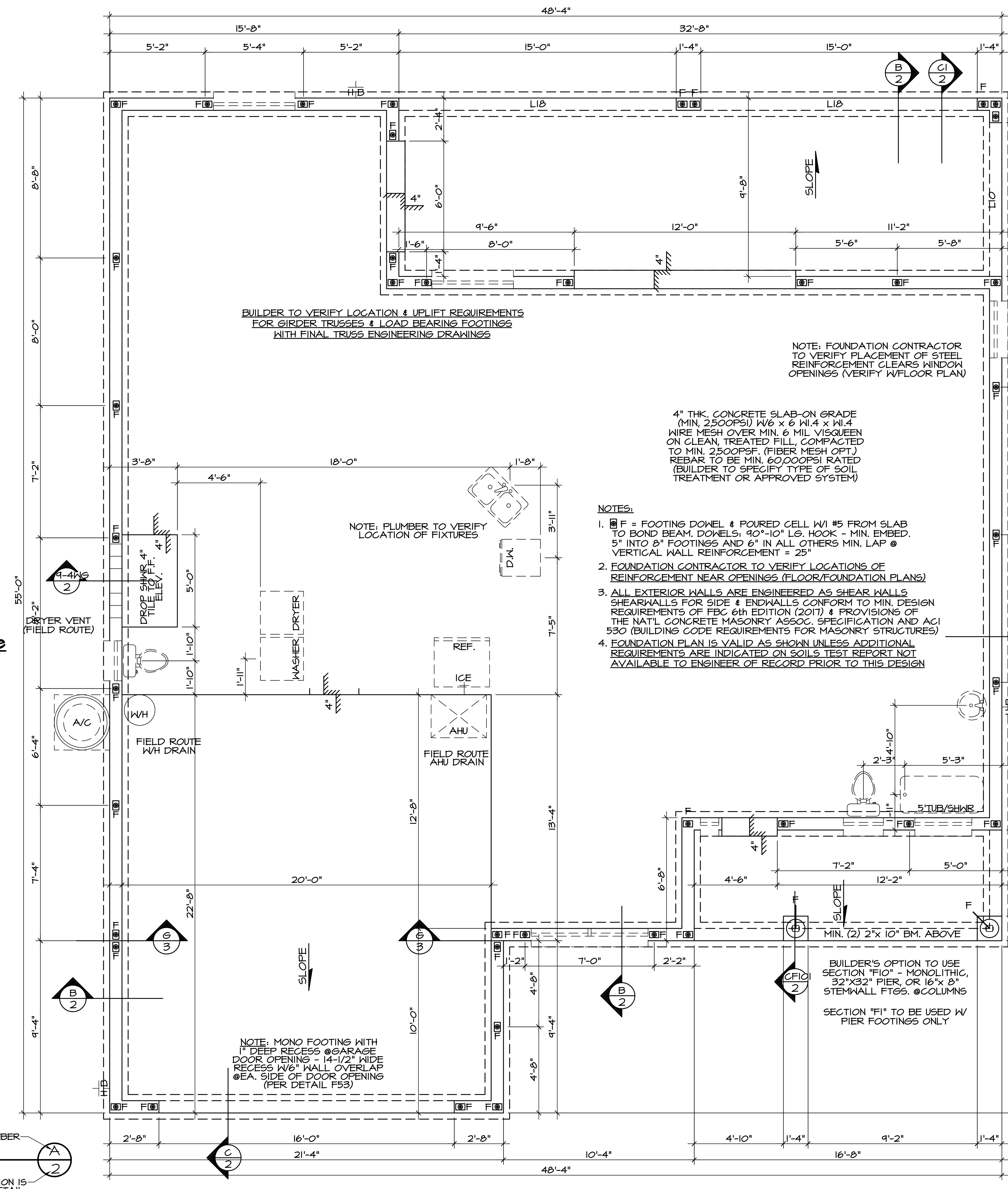

NOTES:
1. ▣F = FOOTING DOWEL & POURED CELL W/1 #5 FROM SLAB TO BOND BEAM. DOWELS: 90°-10" LG. HOOK - MIN. EMBED. 5" INTO 8" FOOTINGS AND 6" IN ALL OTHERS MIN. LAP @ VERTICAL WALL REINFORCEMENT = 25"
2. FOUNDATION CONTRACTOR TO VERIFY LOCATIONS OF REINFORCEMENT NEAR OPENINGS (FLOOR/FOUNDATION PLANS)
3. ALL EXTERIOR WALLS ARE ENGINEERED AS SHEAR WALLS SHEARWALLS FOR SIDE & ENDWALLS CONFORM TO MIN. DESIGN REQUIREMENTS OF FBC 6th EDITION (2017) & PROVISIONS OF THE NAT'L CONCRETE MASONRY ASSOC. SPECIFICATION AND ACI 530 (BUILDING CODE REQUIREMENTS FOR MASONRY STRUCTURES)
4. FOUNDATION PLAN IS VALID AS SHOWN UNLESS ADDITIONAL REQUIREMENTS ARE INDICATED ON SOILS TEST REPORT NOT AVAILABLE TO ENGINEER OF RECORD PRIOR TO THIS DESIGN

Foundation Plan
1/4" = 1'-0"

CONNECTOR SCHEDULE		
SIMPSON STRONG-TIE		
Stock Number	FL. APP #	Uplift
H2.5A	10456.12	600
H4	10456.14	360
H2.5T	11478.5	545
H6	10456.16	915
H10A	11478.4	905
META12	11473.17	1,240
META16 THRU 18	11473.17	1,450
META20 THRU 24	11473.18	1,450
HETA12 THRU 20	11473.3	1,805
ABU44	10849.6	1,800
ABU66	10849.6	2,300
CC44	10860.3	1,220
CC46	10860.3	2,330
LUS210-2	10655.107	1,710
LUS214-2	10655.108	1,710
MTS12	10456.33	1,000
LTS12	10456.29	775
LTS16	10456.30	775
MBHA3.56/925	10866.12	3,145
LFTA	10456.28	1,205
H15	10456.8	1,300
H16	11470.2	1,470
MGT	11468.21	3,965
HGT-2	10866.10	10,980
HGT-3	10456.19	10,530
HGT-4	10456.20	9,250
ST9	10852.13	755
LSTA30	10852.4	1,640
HUC210-2	10631.28	1,505
LGT-2	11470.6	2,150
LGT3-SDS2.5	11470.6	3,285
LGT4-SDS3	11470.6	3,285

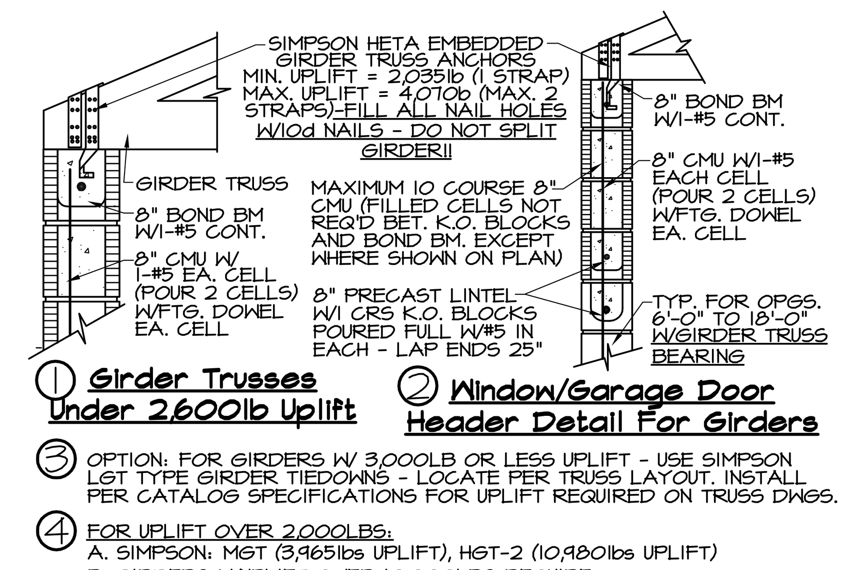

① **Girder Trusses Under 2,600lb Uplift**
② **Window/Garage Door Header Detail For Girders**
③ OPTION: FOR GIRDERS W/ 3,000LB OR LESS UPLIFT - USE SIMPSON LGT TYPE GIRDER TIEDOWNS - LOCATE PER TRUSS LAYOUT. INSTALL PER CATALOG SPECIFICATIONS FOR UPLIFT REQUIRED ON TRUSS DWGS.
④ FOR UPLIFT OVER 2,000LBS:
A. SIMPSON: MGT (3,965lbs UPLIFT), HGT-2 (10,980lbs UPLIFT)
B. GIRDERS W/UPLIFT OVER 10,000LBS REQUIRE TRUSS ENGINEER TO SPECIFY HOLD DOWNS
INSTALL PER MFGR. SPECIFICATIONS AND DETAILS

SECTION G / 2
1/2" = 1'-0"

Girder Truss Hold-downs Masonry
REVISED 7/15/2015

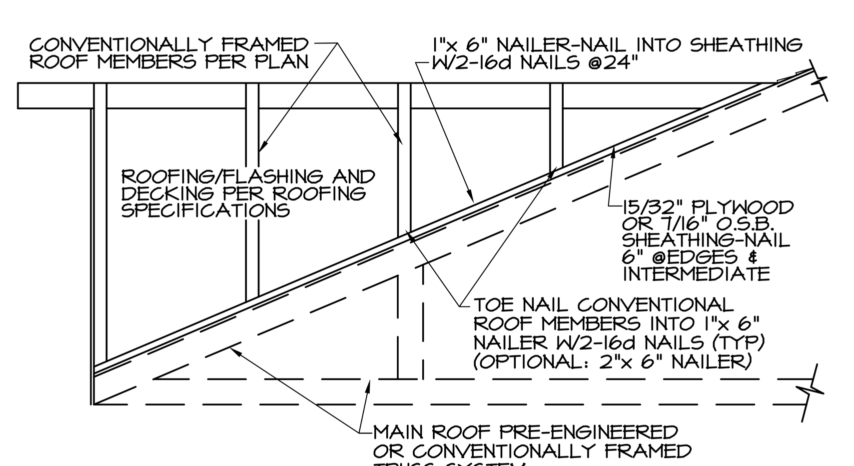

SECTION V / 2
1/2" = 1'-0"

Valley Framing Detail Conventional Framing
REVISED 7/15/2015

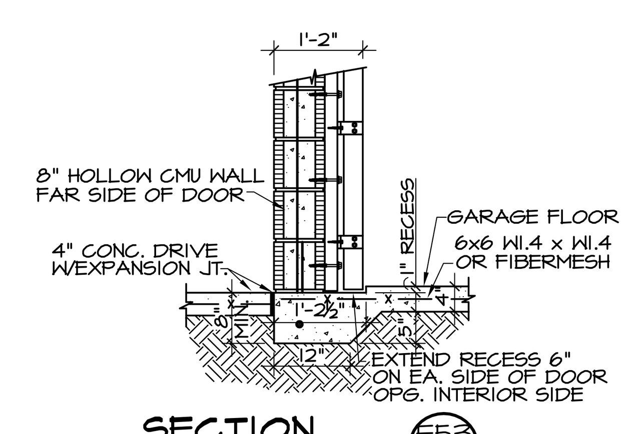

SECTION F53 / 2
1/2" = 1'-0"

Garage Door Recess W/Monolithic Footing
REVISED 7/15/2015

ROOFING SPECIFICATIONS:
1. ROOFING COMPONENTS SHALL CONFORM TO FBC 6th ED. (2017) MATERIAL AND INSTALLATION REQUIREMENTS FOR THE BASIC WIND SPEED SHOWN IN THE DESIGN LOADS. SHINGLES SHALL MEET ALL REQUIREMENTS OF ASTM D3161 (INSTALLATION METHODS, FASTENERS AND MATERIALS) PROOF OF COMPLIANCE SHALL BE PROVIDED AT THE JOB SITE FOR ROOFING INSPECTIONS.
2. ROOFING TO BE INSTALLED ON PRE-ENGINEERED WOOD TRUSS SYSTEM @24" (UNLESS OTHERWISE SPECIFIED)
3. ROOF STRUCTURAL PANELS: MIN. 15/32" PLYWOOD OR 7/16" O.S.B. W/8d RINGSHANK NAILS @6" EDGES AND 6" INTERMEDIATE.
4. UNDERLAYMENT: APPROVED SELF-ADHERING POLYMER MODIFIED BITUMEN SHEET (ASTM D1970) OR APPROVED SELF ADHERING SYNTHETIC INSTALLED PER MFGR. SPECS.
5. METAL ROOFING SHALL COMPLY W/FBC 5th EDITION (2014) 1507.4.3 & TABLE 1507.4.3 (AS REQUIRED)
6. FLASHING, DRIP EDGE AND CRICKETS SHALL COMPLY WITH FBC 6th EDITION (2017)

MINIMUM STEMWALL HT. = 1'-4" AS SHOWN ON WALL SECTIONS. IF STEMWALL EXCEEDS 6'-0" IN HT., THE ENGINEER OF RECORD MUST REVIEW THE FOUNDATION PLAN TO DETERMINE IF MORE POURED CELLS ARE REQUIRED. IF STEMWALL EXCEEDS 5 COURSES - ALL CELLS INDICATED ON FOUNDATION PLAN MUST BE POURED FULL PRIOR TO BACKFILLING OF FOUNDATION.

DESIGN LOADS:
1. Design conforms with Florida Bldg. Code 6th Edition (2017) (Building & Residential) Design Criteria for 140MPH Wind Forces Per ASCE/SEI 7-10 Minimum Design Loads For Buildings & Other Structures.
2. Wood: No. 2 Grade Southern Pine Or Better
3. Risk Category II
4. MWFRS Chapters 26 Thru 29
5. Chap. 30: Components/Cladding (C& C)
Part 1: Low Rise Building
Doors & Windows +30 PSF/-35 PSF
Garage Door +30 PSF/-35 PSF
6. Internal Pressure Coefficient: ± 0.18
7. Exposure "B"
8. Residential Catagory R3

Plans Designed and Engineered In Accordance W/FBC-R, FBC2017/6th Ed. 140MPH Basic Wind Speed
INTERPOLATED FROM FBC WIND ZONE MAP
Spencer N. Robinson, P.E.
FL 81250

REVISIONS	BY

ARCHITECTURAL HOME DESIGN
COMPUTER AIDED DRAFTING
OVER 20 YEARS OF SERVICE
AWARD WINNING DESIGNS
PROFESSIONAL QUALITY
Dynagraphics
DESIGN DRAFTING
OFFICE: 921 SHADOW DR. SUITE 3 LAKELAND, FL 33809
PHONE: 863-859-6107
FAX: 863-853-4503
Email: Dynagraphics@tampabay.rr.com

Design #1 Custom For: Crossroad Construction Co.
Sandpiper, Lakeland Fl.
Foundation Plan

DRAWN BY
FWF
CHECKED BY
LHF 1/12/2018
DATE
LHF 1/11/2018
SCALE
AS NOTED
SHEET
2
OF 3 SHEETS
JOB No.
CC17-118

NOTE: Client or Builder is responsible for approval of plans. Approval for Dynagraphics to complete engineering denotes acceptance of plans as drawn.
NOTE: **ROOM SIZES ARE APPROXIMATE** Dimensions are from inside masonry and framing, rounded up to the nearest inch (Masonry walls = 8", Frame walls = 4" widths). Furring, drywall, insulation and baseboards are not included in dimensions. Actual room sizes vary per builder specification.
NOTE: This plan set has been approved for use as site specific. Construction of more than one home or variance from plan specifications is prohibited without express written consent of the engineer of record. DYNAGRAPHICS holds design rights to certain details and sections shown, unauthorized use is prohibited.